LEDE®

SHANDONG LEDE MACHINERY CO.,LTD.

ISO9001

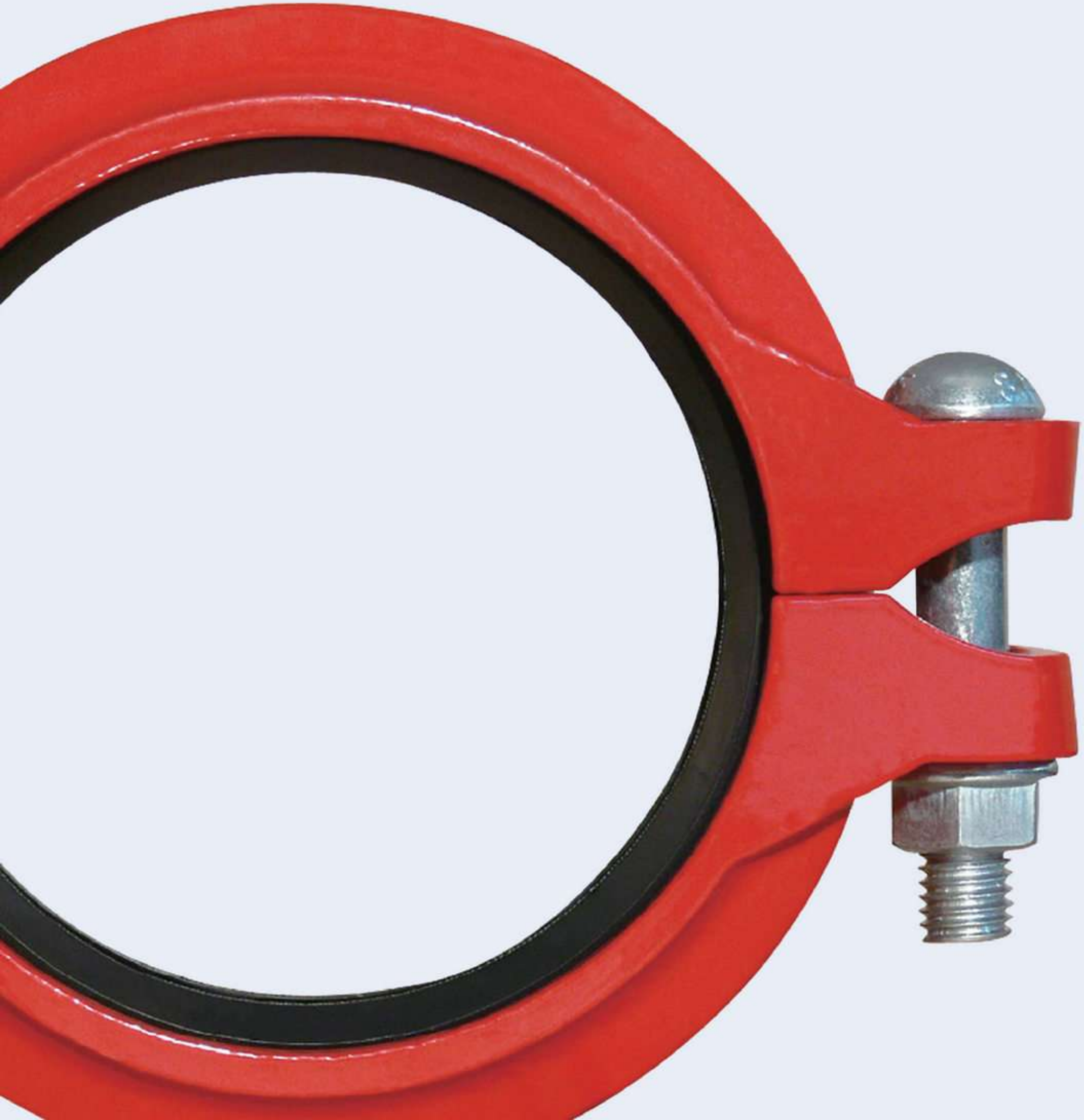

LEDE®

FOUNDED IN 1999

WHERE IS THE PIPE,WHERE IS THE LEDE GROOVED FITTINGS.

Customer's success

is our success

We are dedicated to improving our products on Every Detail

MOST PROFESSIONAL MANUFACTURER OF GROOVED FITTINGS

Shandong Lede Machinery Co.,Ltd. was founded in 1999, mainly engages in the production of Ductile Iron Grooved Fittings, the annual production capacity can reach 20,000tons, Now LEDE has been the leading manufacturer in the field of grooved fittings in china.

LEDE is committed to supplying the high price-performance ratio products that follows the international standard for all the customers worldwide. For ductile iron grooved fittings, LEDE has been approved by some International quality assurance agencies like FM and UL. LEDE products are also in accordance with some Internationl Standards such as ANSI, ASTM, DIN, BS ect. In addition, the Mechanical tee and Mechanical cross have got the national designing patent on the apperance.

LEDE owns two big foundries with advanced electric furnaces and disa lines, the Machining plant and Surface disposal plant are both operated automatically. The mold center keeps developing new products which can satisfiy diverse requirements for specifications, structure and characteristics of the products from different customers.

The selling network of LEDE products has spreaded over most countries in the world, Currenly the products have been exported to America, Europe, Russia, Canada, Australia, Middle East and some other countries. LEDE products have been applied to many famous constructions.
LEDE products are wildly used on various fields as follows:

- Automatic sprinkler system for Fire protection on Commercial,Civil and Municipal constructions like Water supplying, Gas supplying,Heat supplying,Drainage,Airconditioning etc.
- Industrial pipeline system on Shipping, Mine, Oil field, Textile, Power plant, Paper making, Beverage and Steel making etc.
- Pipeline system on Subway station, Railway station,Airport, Seaport,Bridge,Channel ect.

IQNet

THE INTERNATIONAL CERTIFICATION NETWORK

CERTIFICATE

IQNet and CQC hereby certify that the organization

Shandong Lude Machinery Co., Ltd.

No.1999, West Wuhuan N. Road, Weicheng District, Weifang City, Shandong Province, P.R.China

For the following field of activities
Production of Grooved Couplings and Fittings

Has implemented and maintains a
Management System
Which fulfils the requirements of the following standard
ISO9001:2008

Business Design and Development Requirement

Issued on: Mar. 16, 2010
Validity date: Mar. 15, 2013
Registration Number: 00110Q22604R2M/3700

-IQNet-
Rolf Wanner
President of IQNet

Wang Haijun
President of CQC

CQC

UL the standard in safety

Underwriters Laboratories

File E015229 Vol 1 Issued: 2009-02-11
Revised: 2009-02-12

FOLLOW-UP SERVICE PROCEDURE
(TYPE X)

FITTINGS, GROOVED AND FLAIR END
(VZIA,VZIA7)

Manufacturer: (100064-870) WEIFANG LEDE MACHINERY CO LTD
NO 1998
WEST WAHUAN N RD
WEICHENG DISTRICT
WEIFANG,
SHANDONG 261057 CHINA

Applicant: (100064-870) SAME AS MANUFACTURER

Licsee: (100064-870) SAME AS MANUFACTURER

This Procedure authorizes the above manufacturer to use the marking specified by Underwriters Laboratories Inc.(UL), or any authorized licensee of UL, only on products covered by this Procedure, in accordance with the applicable UL Services Agreement.

The prescribed Mark or Marking shall be used only at the above manufacturing location on such products which comply with this Procedure and any other applicable requirements.

The Procedure contains information for the use of the above named Manufacturer and representatives of Underwriters Laboratories Inc. and is not to be used for any other purpose. It is lent to the Manufacturer with the understanding that it is not to be copied, either wholly or in part, and that it will be returned to Underwriters Laboratories Inc. (UL) or any authorized licensee of UL, upon request.

This PROCEDURE, and any subsequent revision, is the property of Underwriters Laboratories Inc.(UL) and the authorized licensee of UL and is not transferable.

Underwriters Laboratories Inc.

Stephen Hanson
Senior Vice President
Global Follow-Up Service Operations

William R. Carney
Director
North American Certification Program

300psi
Rigid Coupling
XGQT1

300psi
Flexible Coupling
XGQT2

500psi
Rigid Coupling(Heavy-duty)
M1

500psi
Flexible Coupling(Heavy-duty)
M2

Reducing Coupling
XGQT3

Adaptor Flange
XGQT08

Grooved Flange
XGQT09

Threaded Flange
XGQT02

Cap
XGQT06

Cap with Eccentric hole
XGQT061

Tee
XGQT03

Cross
XGQT05

Threaded Reducing Tee
XGQT03

Grooved Reducing Tee
XGQT03

Grooved Reducing Cross
XGQT05

the standard in safety

Underwriters Laboratories

File R15238 Vol. 1 Issued: 2009-01-16
Revised:

FOLLOW-UP SERVICE PROCEDURE
(TYPE 3)

FITTINGS, RUBBER GASKETED
(VIEW,VIEW?)

Manufacturer: (100944-870) WEIFANG LEDE MACHINERY CO LTD
NO 3998
WEST WAIHUAN N RD
WEICHENG DISTRICT
WEIFANG,
SHANDONG 261057 CHINA

Applicant: (100944-870) SAME AS MANUFACTURER

Listee: (100944-870) SAME AS MANUFACTURER

This Procedure authorizes the above manufacturer to use the marking specified by Underwriters Laboratories Inc.(UL), or any authorized licensee of UL, only on products covered by this Procedure, in accordance with the applicable UL Services Agreement.

The prescribed Mark or Marking shall be used only at the above manufacturing location on such products which comply with this Procedure and any other applicable requirements.

The Procedure contains information for the use of the above named Manufacturer and representatives of Underwriters Laboratories Inc. and is not to be used for any other purpose. It is lent to the Manufacturer with the understanding that it is not to be copied, either wholly or in part, and that it will be returned to Underwriters Laboratories Inc. (UL) or any authorized licensee of UL, upon request.

This PROCEDURE, and any subsequent revision, is the property of Underwriters Laboratories Inc.(UL) and the authorized licensee of UL and is not transferable.

Underwriters Laboratories Inc.

Stephen Hewson
Senior Vice President
Global Follow-Up Service Operations

William R. Carney
Director
North American Certification Program

Safenet Limited
Denford Garage, Denford, Kettering, Northants., NN14 4EQ, England

Product Safety Compliance Certificate

This is to certify that

Shandong Lede Machinery Co., Ltd.
Of:-
No.3998, West Waihuan North Road, Weifang City, P.R.China

Has had a range of Grooved Coupling and Fittings examined with regards to the Directive 2001/95/EC.

Manufactured by

Shandong Lede Machinery Co., Ltd.
Of:-
No.3998, West Waihuan North Road, Weifang City, P.R.China

In respect of model XGQT1

1. The technical reports contain all the relevant information.
2. Having verified that the appropriate tests have been conducted:
2.1. The standards and harmonised standards as the case may be, have been applied correctly
2.2. The example representing series production of the item complies with the requirements of the Directive 2001/95/EC
2.3. The Technical file contains all the information to include the following models in the certification. XGQT1, XGQT2, XGQT3, XGQT51, XGQT52, XGQT53, XGQT54, XGQT55, XGQT56, XGQT57, XGQT58, XGQT58, XGQT511, XGQT512, XGQT513, XGQT41 and XGQT51.

Certificate Number: 1212180810

Date: 20/08/2012

Signed for Safenet Limited

Technical Manager

FM APPROVED

Certificate of Compliance

PIPE FITTINGS FOR USE IN ABOVEGROUND SPRINKLER SYSTEMS

This certificate is issued for the following equipment:

Products: Grooved Elbows, 45° and 90°
Equal Tees
Reducing Tees
Crosses
Grooved Flange Adapters
End Caps
Concentric Reducers

Manufactured by: WEIFANG LEDE MACHINERY CO., LTD.
No. 3998, West Waihuan N. Road
Weifang City, Shandong
P. R. China 261057

FM Approvals confirms that the items have been found to comply with the following draft standard:

FM Approvals Standard Class Number 1920

Project Identifier: 3027706 Date of Approval: September 7, 2007

FM Approvals

Richard B. Dunne
Group Manager, Hydraulics
FM Approvals

September 19, 2007
Date

11.25° Elbow
XGQT013

22.5° Elbow
XGQT012

45° Elbow
XGQT011

90° Elbow
XGQT01

90° ReducingElbow
XGQT014

HDPE Coupling
HDPE

U Bolt Mechanical Tee
XGQT041

Threaded Mechanical Tee
XGQT04

Grooved Mechanical Tee
XGQT04

Grooved Mechanical Cross
XGQT04

Threaded Mechanical Cross
XGQT04

Threaded Reducer
XGQT07

Grooved Reducer
XGQT07

Grooved Eccentric Reducer
XGQT071

Threaded Eccentric Reducer
XGQT071

THE INTERNATIONAL CERTIFICATION NETWORK

CERTIFICATE

IQNet and
CQC
hereby certify that the organization

Shandong Lede Machinery Co., Ltd.

No.3998, West Waihuan N. Road, Weicheng District, Weifang City, Shandong Province, P.R.China

For the following field of activities
Production of Grooved Couplings and Fittings

Has implemented and maintains a
Management System
Which fulfils the requirements of the following standard

ISO9001:2008

Exclusions:Design and Development Requirement

Issued on: Mar. 16, 2010
Validity date: Mar. 15, 2013
Registration Number: ***00110Q22604R2M/3700***

René Wasmer
President of IQNet

Wang Kejiao
President of CQC

IQNet Partners*:
AENOR *Spain* AFNOR Certification *France* AIB-Vinçotte International *Belgium* ANCE *Mexico* APCER *Portugal* CISQ *Italy*
CQC *China* CQM *China* CQS *Czech Republic* Cro Cert *Croatia* DQS Holding GmbH *Germany* DS *Denmark* ELOT *Greece*
FCAV *Brazil* FONDONORMA *Venezuela* HKQAA *Hong Kong China* ICONTEC *Colombia* IMNC *Mexico* Inspecta Certification *Finland*
IRAM *Argentina* JQA *Japan* KFQ *Korea* MSZT *Hungary* Nemko AS *Norway* NSAI *Ireland* PCBC *Poland*
Quality Austria *Austria* RR *Russia* SII *Israel* SIQ *Slovenia* SIRIM QAS International *Malaysia* SQS *Switzerland* SRAC *Romania*
TEST St Petersburg *Russia* TSE *Turkey* YUQS *Serbia*
IQNet is represented in the USA by: AFNOR Certification, CISQ, DQS Holding GmbH and NSAI Inc.
* The list of IQNet partners is valid at the time of issue of this certificate. Updated information is available under www.iqnet-certification.com

FM APPROVED

Certificate of Compliance

Pipe Fittings

The following items are FM Approved when manufactured at the facilities listed below

Shandong Lede Machinery Co.,Ltd

Automatic Sprinkler Systems / Pipes and Fittings for Aboveground / Pipe Fittings / Fittings, Side Outlet, Rigid:

Product Designation	*Fitting Description*	*Nominal Run by Outlet Sizes, in.*	*Remarks*	*Max Working Pressure, psi (kPa)*
XGQT04G	Mechanical Tee Grooved Outlet	2 x 1-1/4, 1-1/2 76 mm x 1-1/4, 1-1/2 3 x 1-1/4, 1-1/2 4 x 1-1/4, 1-1/2, 2 165 mm x 2, 76 mm 8 x 76 mm, 3	a, b, c, d, e	300 (2070)
XGQT04S	Mechanical Tee Threaded Outlet	2 x 1/2, 3/4, 1, 1-1/4, 1-1/2 76 mm x 1/2, 3/4, 1, 1-1/4, 1-1/2 3 x 1/2, 3/4, 1, 1-1/4, 1-1/2 108 mm x 1, 1-1/4, 1-1/2, 2 4 x 1, 1-1/4, 1-1/2, 2 133 mm x 1, 1-1/4, 1-1/2, 2 140 mm x 1, 1-1/4, 1-1/2, 2 165 mm x 1, 1-1/4, 1-1/2, 2, 2-1/2 8 x 1, 1-1/4, 1-1/2, 2, 2-1/2, 3	a, b, c, d, e	300 (2070)
XGQT04S	Mechanical Tee - U Bolt Threaded Outlet	1-1/4 x 1/2, 3/4, 1 1-1/2 x 1/2, 3/4, 1 2 x 1/2, 3/4, 1 76 mm x 1/2, 3/4, 1	a, b, c, d, e	300 (2070)

Remarks:

a. For use with Schedule 40 and heavier pipe.
b. For use with Chinese Standard GB/T 3091 pipe.
c. For use with Chinese Standard GB/T 3092 pipe.
d. With EPDM gasket.
e. Product is marked with acceptable trade name of either "LEDE" or "LEnE"

FM Approvals®

Member of the FM Global Group

RBD August 31, 2010

FM APPROVED

Certificate of Compliance

Automatic Sprinkler Systems / Pipes and Fittings for Aboveground / Pipe Fittings / Pipe Fittings:

Product Designation	*Fitting Description*	*Nominal Pipe Size, in.*	*Max Working Pressure, psi (kPa)*	*Remarks*
XGQT01	90° Elbow Grooved	2, 2-1/2, 3, 4, 5, 6, 8 76, 108, 133, 140, 159, 165 mm	300 (2070)	b
	Short Radius 90° Elbow Grooved	4, 8 108, 140, 159, 165 mm	300 (2070)	b
	Long Radius 90° Elbow Grooved	1, 1-1/4, 1-1/2, 2, 2-1/2, 3, 4, 5, 6, 8 76, 108, 133, 140, 159, 165 mm	300 (2070)	b
XGQT011	45° Elbow Grooved	1, 1-1/4, 1-1/2, 2, 3, 4, 8 76, 108, 133, 140, 159, 165 mm	300 (2070)	b
XGQT03	Equal Tee Grooved	2, 2-1/2, 3, 4, 5, 6, 8 76, 108, 133, 140, 159, 165 mm	300 (2070)	b
	Short Equal Tee Grooved	4, 8 108, 140, 159, 165 mm	300 (2070)	b
	Long Equal Tee Grooved	1, 1-1/4, 1-1/2, 2, 2-1/2, 3, 4, 5, 6, 8 76, 108, 133, 140, 159, 165 mm	300 (2070)	b
XGQT03	Reducing Tee Grooved	2-1/2 x 1-1/2, 2 76 mm x 1-1/2, 2 3 x 2, 76 mm 108 mm x 76 mm, 3 4 x 76 mm, 3 140 mm x 2, 76 mm, 3, 4 159 mm x 76 mm, 3, 4, 140 mm 165 mm x 76 mm, 3, 4, 140 mm 8 x 4, 140 mm, 165 mm	300 (2070)	b
XGQT06	Cap Grooved	1, 1-1/4, 1-1/2, 2, 3, 4, 8 76, 108, 133, 140, 159, 165 mm	300 (2070)	b

FM Approvals

Member of the FM Global Group

RBQ 8-31-10

FM APPROVED

Certificate of Compliance

Product Designation	*Fitting Description*	*Nominal Pipe Size, in.*	*Max Working Pressure, psi (kPa)*	*Remarks*
XGQT07G	Concentric Reducer Grooved	1-1/2 x 1-1/4 2 x 1-1/4, 1-1/4 2-1/2 x 1-1/4, 1-1/2 76 mm x 1-1/4, 1-1/4, 2 3 x 1-1/4, 1-1/2, 2, 2-1/2, 76 mm 108 mm x 76 mm, 3 4 x 1-1/4, 1-1/2, 2, 2-1/2, 76 mm, 3 133 mm x 76 mm, 3, 4 140 mm x 2, 2-1/2, 76 mm, 3, 4 159 mm x 76 mm, 3, 4, 140 mm 165 mm x 2, 2-1/2, 76 mm, 3, 4, 140 mm 8 x 4, 140 mm, 165 mm	300 (2070)	b
XGQT07S	Concentric Reducer Grooved x Metric Threaded Small End	2 x 1, 1-1/4, 1-1/2 76 mm x 1, 1-1/4, 1-1/2, 2 3 x 1, 1-1/4, 1-1/2, 2 108 mm x 1, 1-1/4, 1-1/2, 2 4 x 1, 1-1/4, 1-1/2, 2, 2-1/2 133 mm x 1, 1-1/4, 1-1/2, 2 140 mm x 1, 1-1/4, 1-1/2,, 2, 2-1/2 159 mm x 1, 1-1/4, 1-1/2, 2, 2-1/2, 3 165 mm x 1, 1-1/4, 1-1/2, 2, 2-1/2, 3 8 x 2, 2-1/2, 3	300 (2070)	a, b
XGQT05	Equal Cross Grooved	2, 3, 4 76, 108, 133, 140, 159, 165 mm	300 (2070)	b
XGQT08	Flange Adapter Grooved	2, 3, 4, 8 76, 108, 133, 140, 159, 165 mm	300 (2070)	b

Remarks:

a. Threads per ISO RC series threads

b. Product is marked with acceptable trade name of either "LEDE" or "LEnE"

FM Approvals

Member of the FM Global Group

RBD 8-31-10

FM APPROVED

Certificate of Compliance

Automatic Sprinkler Systems / Pipes and Fittings for Aboveground / Grooved Couplings or Fittings / Grooved Couplings, Standard-Flexible:

Product Designation	*Nominal Pipe Size, in.*	*Pipe Ends*	*Remarks*	*Max Working Pressure, psi (kPa)*
XGQT2	1, 1-1/4, 1-1/2, 2, 2-1/2, 3, 4, 5, 6, 8 76, 108, 140, 159, 165 mm	Cut Groove, Rolled Groove	a, b, c, e, f	300 (2070)
	10, 12	Cut Groove	d, e, f	300 (2070)

Remarks:

a. For use with Schedule 40 and heavier pipe.
b. For use with Chinese Standard GB/T 3091 pipe.
c. For use with Chinese Standard GB/T 3092 pipe.
d. For use with Schedule 60 or heavier seamless steel pipe.
e. With EPDM gasket.
f. Product is marked with acceptable trade name of either "LEDE" or "LEnE"

Automatic Sprinkler Systems / Pipes and Fittings for Aboveground / Grooved Couplings or Fittings / Grooved Couplings, Standard-Rigid:

Product Designation	*Nominal Pipe Size, in.*	*Pipe Ends*	*Remarks*	*Max Working Pressure, psi (kPa)*
XGQT1	1, 1-1/4, 1-1/2, 2, 2-1/2, 3, 4, 5, 6, 8 76, 108, 133, 140, 159, 165 mm	Cut Groove, Rolled Groove	a, b, c, e, f	300 (2070)
	10, 12	Cut Groove	d, e, f	300 (2070)

Remarks:

a. For use with Schedule 40 and heavier pipe.
b. For use with Chinese Standard GB/T 3091 pipe.
c. For use with Chinese Standard GB/T 3092 pipe.
d. For use with Schedule 60 or heavier seamless steel pipe.
e. With EPDM gasket.
f. Product is marked with acceptable trade name of either "LEDE" or "LEnE"

FM Approvals

Member of the FM Global Group

RBD 8-31-10

FM APPROVED

Certificate of Compliance

Automatic Sprinkler Systems / Pipes and Fittings for Aboveground / Grooved Couplings or Fittings / Grooved Split Flanges-Flexible:

Product Designation	*Fitting Description*	*Nominal Pipe Size, in.*	*Remarks*	*Max Working Pressure, psi (kPa)*
XGQT09	Split Flange	2, 3, 4, 5, 6, 8 76, 108, 140, 159, 165 mm	a, b, c, d, e	175 (1205)

Remarks:

a. For use with Schedule 40 and heavier pipe.
b. For use with Chinese Standard GB/T 3091 pipe.
c. For use with Chinese Standard GB/T 3092 pipe.
d. With EPDM gasket.
e. Product is marked with acceptable trade name of either "LEDE" or "LEnE"

Manufactured by: **Shandong Lede Machinery Co.,Ltd**
3998 West Weihuan N Rd, Weicheng Dist, Weifang City,
Shandong 261057, China

FM Approvals confirms that the above items have been found to comply with the following standard:

FM Approval Standard: 1920 Approval Standard for Pipe Couplings and Fittings for Aboveground Fire Protection Systems (November, 2007)

Said Approval is subject to satisfactory field performance, continuing follow-up Facilities and Procedures Audits, and strict conformity to the constructions as shown in the Approval Guide, an online resource of FM Approvals.

For more than 160 years FM Approvals has partnered with business and industry to reduce property losses.

Project Identifiers: **3035240, 3027706, 3032574, 3034161, 3030362**

Richard B. Dunne, Manager, Hydraulics Group Date August 31, 2010

FM Approvals
1151 Boston-Providence Turnpike
Norwood, MA 02062

FM Approvals®
Member of the FM Global Group

the standard in safety

Underwriters Laboratories

File EX15228 Vol 1 Issued: 2009-01-16
Revised:

FOLLOW-UP SERVICE PROCEDURE
(TYPE R)

FITTINGS, RUBBER GASKETED
(VIZM,VIZM7)

Manufacturer: WEIFANG LEDE MACHINERY CO LTD
(100044-870) NO 3998
WEST WAIHUAN N RD
WEICHENG DISTRICT
WEIFANG,
SHANDONG 261057 CHINA

Applicant: SAME AS MANUFACTURER
(100044-870)

Listee: SAME AS MANUFACTURER
(100044-870)

This Procedure authorizes the above manufacturer to use the marking specified by Underwriters Laboratories Inc.(UL), or any authorized licensee of UL, only on products covered by this Procedure, in accordance with the applicable UL Services Agreement.

The prescribed Mark or Marking shall be used only at the above manufacturing location on such products which comply with this Procedure and any other applicable requirements.

The Procedure contains information for the use of the above named Manufacturer and representatives of Underwriters Laboratories Inc. and is not to be used for any other purpose. It is lent to the Manufacturer with the understanding that it is not to be copied, either wholly or in part, and that it will be returned to Underwriters Laboratories Inc. (UL) or any authorized licensee of UL, upon request.

This PROCEDURE, and any subsequent revision, is the property of Underwriters Laboratories Inc.(UL) and the authorized licensee of UL and is not transferable.

Underwriters Laboratories Inc.

Stephen Hewson
Senior Vice President
Global Follow-Up Service Operations

William R. Carney
Director
North American Certification Program

Product Design

The company has strong team for product research and design, all the molds are disigned by advanced CAD/CAM computer aided system, based on finite element theory to optimize product structure. Possible defects are fully considered during casting process, to make sure the safety coefficient of the product design is more close to actual production.

Casting process

Casting process design is equipped with computer simulation software-Castsoft CAE to simulate the molten iron pouring process to ensure the best technology state and provent possible casting defects.

Mold Machining

All the molds are machined by the processing center, which can achieve one fixture with five-face milling technology, to ensure the dimension precison of the products.

Advanced Production Equipment

All the products are produced with disa lines, its not only of powerful production capacity but also ensures the products' dimension precison when mass production.

Structure test of casting material

Mechanical property of the casting material is subject to the chemical composition of the casting material, Only accurate pouring temperature, pouring time and molten iron weight can guarantee the structure property. The company uses advanced test equipment like spectrum analyzer, molten iron analyzer, ultrosonic flow detector, thermoanalyzer etc. to assure the molten iron of each furnace can reach the standard before pouring.

Mechanics test

The lab of mechanics property will conduct the test of elongation, yield and compression for all the metal products, like bolts, nuts and casting species, to make sure every index is eligible.

Rubber Test

The lab of rubber physical property will conduct the test for rubber on mechanics properties including Shore hardness, elongation rate at break, compression after thermal aging ect., to assure the rubber is eligible.

Sand Test

The test for sand performance including ventilation, strength, mud content can supply reasonable sand mixing program to avoid the fluctuation on sand performance and casting defects.

Air Test

The purpose of the air test is to test the seal proterty of the fittings, due to the gas penetration ability, bad products with sand hole and pin hole will be found during air test. Thus leakage will be avoided.

Product Test

The company owns professional lab to conduct test for hydraulics, higher pressure, bending moment, fire, etc. The picture shows FM engineer is conducting the pressure test.

Pipe Preparation

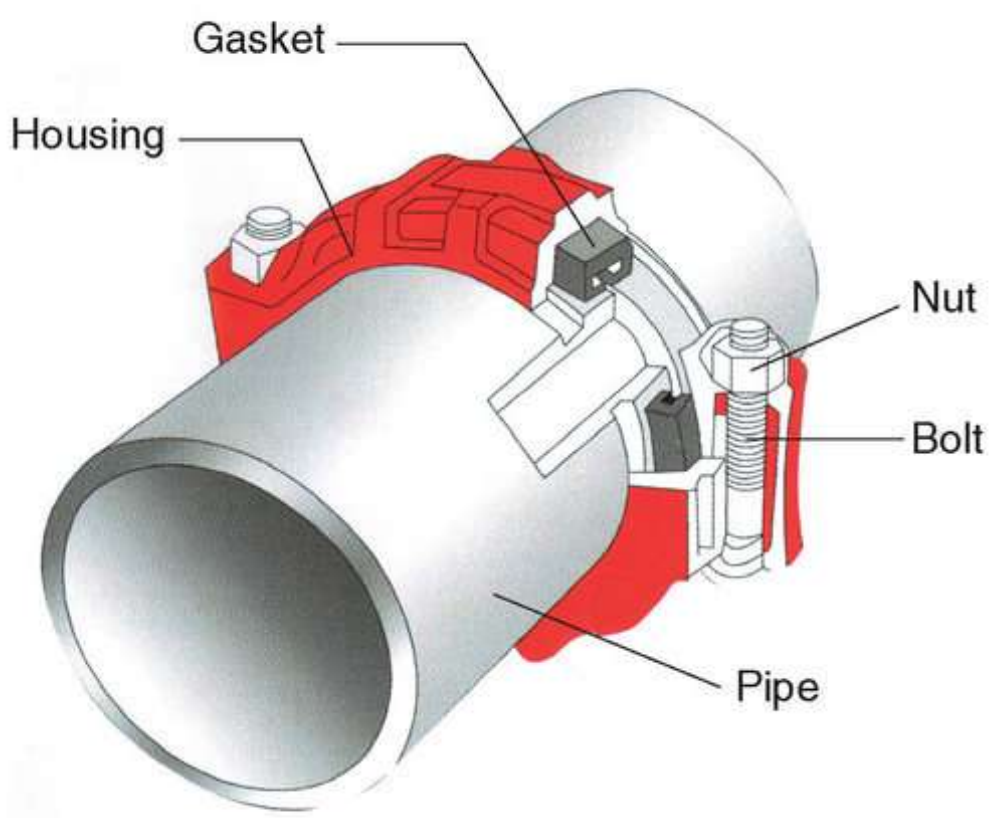

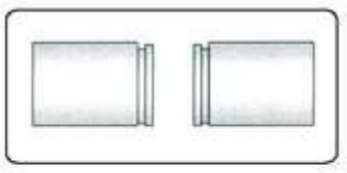
Grooved Pipe

Gasket

Lubricate the gasket

Slide another pipe end

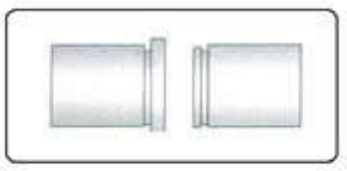
Close another pipe end

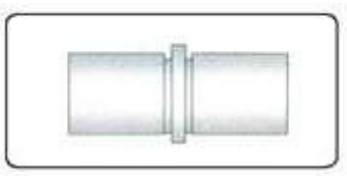
Slide another pipe end into the gasket

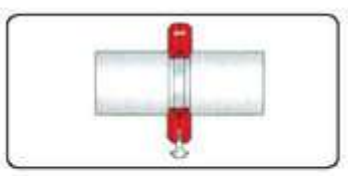
Place the houseings over the gasket

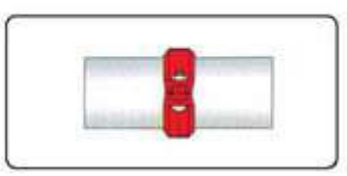
Tighten the blots and nuts

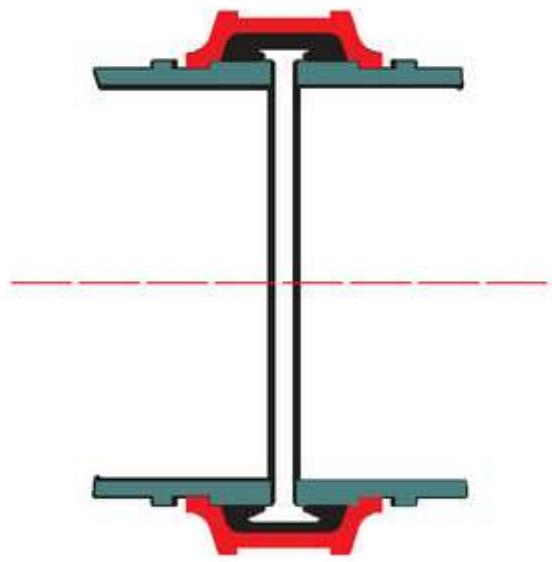

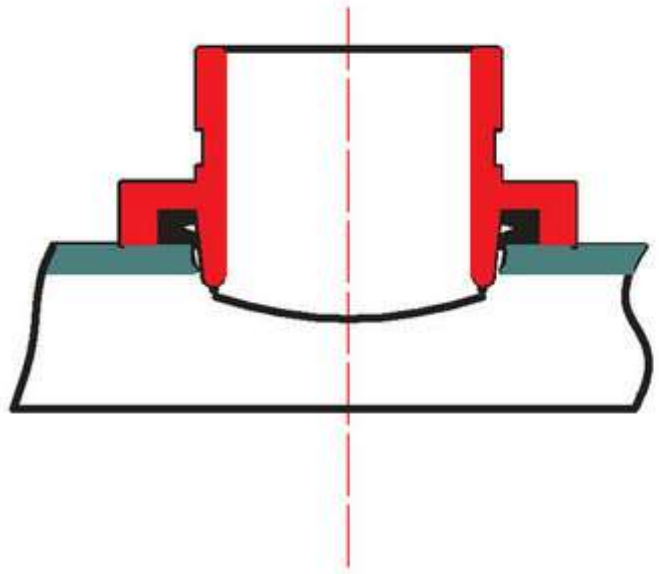

Nominal	Size	Pipe O.D.	A1	B1	C1	C		T	F
INCH	DN	MM	MM	MM	MM	BASIC SIZE MM	TOLERANCE MM	MM	MM
1"	25	33.7	15.9	7.2	1.6	30.2	-0.38	1.8	34.5
11/4"	32	42.4	15.9	7.2	1.6	39	-0.38	1.8	43.3
11/2"	40	48.3	15.9	7.2	1.6	45.1	-0.38	1.8	49.4
2"	50	60.3	15.9	8.8	1.6	57.2	-0.38	1.8	62.2
21/2"	65	73	15.9	8.8	2.0	69.1	-0.46	2.3	75.2
21/2"	65	76.1	15.9	8.8	2.0	72.3	-0.46	2.3	77.7
3"	80	88.9	15.9	8.8	2.0	84.9	-0.46	2.3	90.6
4"	100	114.3	15.9	8.8	2.1	110.1	-0.51	2.3	116.2
5"	125	139.7	15.9	8.8	2.1	135.5	-0.51	2.9	141.7
5"	125	141.3	15.9	8.8	2.1	137	-0.56	2.9	143.5
6"	150	165.1	15.9	8.8	2.2	160.9	-0.56	2.9	167.1
6"	150	168.3	15.9	8.8	2.2	164	-0.56	2.9	170.7
8"	200	219.1	19.1	11.9	2.4	214.4	-0.64	2.9	221.5
10"	250	273	19.1	11.9	2.4	268.3	-0.69	3.6	275.4
12"	300	323.9	19.1	11.9	2.8	318.3	-0.76	4.0	326.2

A1 ±0.76 Gasket seat

B1 ±0.76 Groove width

C Groove diameter

T Minimum thickness(pipe thickness)

C1 Groove depth

F Maximum flare

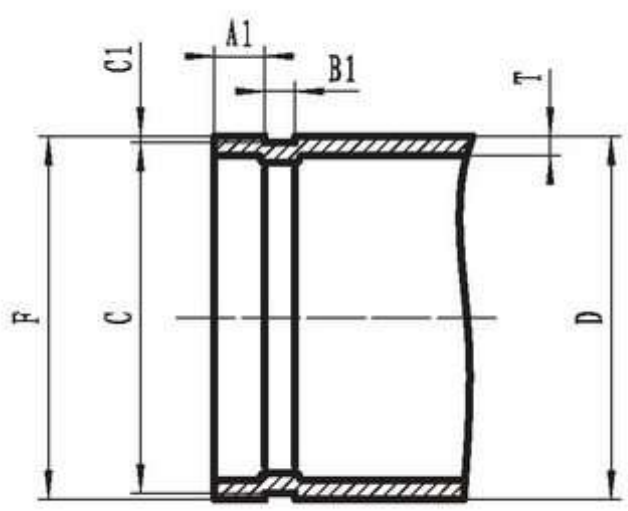

MODEL
HDPE

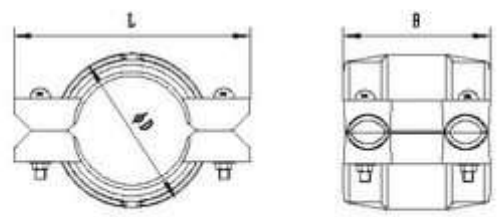

HDPE Coupling

Nominal Size mm/in	Pipe O.D mm	Dimensions			Bolt/Nut
		ΦD mm	L mm	H mm	No.-size (mm)
50	63	85	128	105	4-3/8x60
2					
80	90	110	169	105	4-1/2x75
3					
100	110	136	184	117	4-1/2x75
4					
150	160	190	261	147	4-5/8x85
6					
200	200	238	319	153	4-5/8x90
8					

MODEL
XGQT1

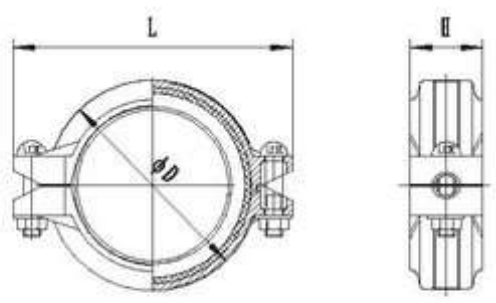

Rigid Coupling

Nominal Size mm/in	Pipe O.D mm/in	Working pressure (PSI)	Dimensions			Bolt/Nut
			ΦD mm	L mm	H mm	No.-size (mm)
25	33.7		55	97	45	"2-3/8x40
1	1.327					(2-M10x40)"
32	42.4		63.5	107.5	45	
1 1/4	1.669					"2-3/8x50
40	48.3		69	114	45	(2-M10x50)"
1 1/2	1.9					
50	57.0		83.6	124	46	"2-3/8x55
2	2.244					(2-M10x55)"
50	60.3		83.6	124	46	
2	2.375					
65	73		95	140	46	
2 1/2	2.875					"2-3/8x60
65	76.1		98	139	46	(2-M10x60)"
2 1/2	3					
80	88.9		114	156	46	
3	3.5					
100	108		142	189	50	
4	4.25					
100	114.3	300PSI	142	189	50	
4	4.5					
125	133.0		170	222	50	
5	5.25					
125	139.7		170	222	50	"2-1/2x70
5	5.5					(2-M12x70)"
125	141.3		170	222	50	
5	5.563					
150	159.0		196	244	50	
6	6.25					
150	165.1		196	244	50	
6	6.5					
150	168.3		198	251	50	
6	6.625					
200	219.1		260	322	58	"2-5/8x85
8	8.625					(2-M16x85)"
250	273		319	393	64	"2-3/4x110
10	10.75					(2-M20x110)"
300	323.9		374	453	65	"2-3/4x130
12	12.75					(2-M20x130)"

MODEL
GKS

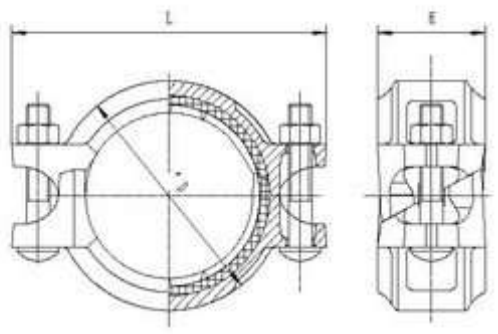

Angle-pad Coupling

Nominal Size mm/in	Pipe O.D mm/in	Working pressure (PSI)	Dimensions			Bolt/Nut
			ΦD	L	H	No.-size (mm)
			mm	mm	mm	
25	33.7		55	97	45	
1	1.327					
32	42.4		63.5	107.5	45	
$1^{1}/_{4}$	1.669					
40	48.3		69	114	45	"2-3/8x60
$1^{1}/_{2}$	1.9					(2-M10x60)"
50	57.0		83.6	124	46	
2	2.244					
50	60.3		83.6	124	46	
2	2.375					
65	73		95	140	46	
$2^{1}/_{2}$	2.875					
65	76.1		98	139	46	"2-3/8x70
$2^{1}/_{2}$	3					(2-M10x70)"
80	88.9		114	156	46	
3	3.5					
100	108	300PSI	142	189	50	
4	4.25					"2-1/2x75
100	114.3		142	189	50	(2-M12x75)"
4	4.5					
125	133.0		170	222	50	
5	5.25					
125	139.7		170	222	50	
5	5.5					
125	141.3		170	222	50	
5	5.563					"2-1/2x80
150	159.0		196	244	50	(2-M12x80)"
6	6.25					
150	165.1		196	244	50	
6	6.5					
150	168.3		198	251	50	
6	6.625					
200	219.1		260	322	58	"2-5/8x115
8	8.625					(2-M16x115)"
250	273		319	393	64	"2-3/4x170
10	10.75					(2-M20x170)"
300	323.9		374	453	65	"2-3/4x185
12	12.75					(2-M20x185)"

MODEL
XGQT2

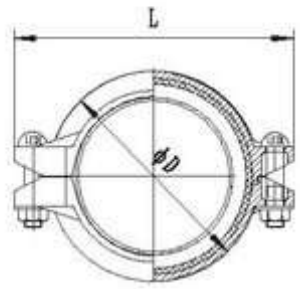

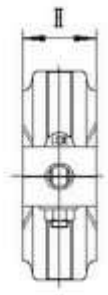

Flexible Coupling

Nominal Size mm/in	Pipe O.D mm/in	Working pressure (PSI)	Dimensions ΦD mm	Dimensions L mm	Dimensions H mm	Bolt/Nut No.-size (mm)
25	33.7		55	97	45	"2-3/8x40
1	1.327					(2-M10x40)"
32	42.4		63.5	107.5	45	
1 1/4	1.669					"2-3/8x50
40	48.3		69	114	45	(2-M10x50)"
1 1/2	1.9					
50	57.0		83.6	124	46	"2-3/8x55
2	2.244					(2-M10x55)"
50	60.3		83.6	124	46	
2	2.375					
65	73		95	140	46	
2 1/2	2.875					"2-3/8x60
65	76.1		98	139	46	(2-M10x60)"
2 1/2	3					
80	88.9		114	156	46	
3	3.5					
100	108		142	189	50	
4	4.25					
100	114.3		142	189	50	
4	4.5					
125	133.0	300PSI	170	222	50	
5	5.25					
125	139.7		170	222	50	"2-1/2x70
5	5.5					(2-M12x70)"
125	141.3		170	222	50	
5	5.563					
150	159.0		196	244	50	
6	6.25					
150	165.1		196	244	50	
6	6.5					
150	168.3		198	251	50	
6	6.625					
200	219.1		260	322	58	"2-5/8x85
8	8.625					(2-M16x85)"
250	273.0		319	393	64	"2-3/4x110
10	10.75					(2-M20x110)"
300	323.9		374	453	65	"2-3/4x130
12	12.75					(2-M20x130)"
350	377.0		428	478.4	75	
14	14.843					"3-7/8x90
400	426.0		478	528.6	75	(3-M22x90)"
16	16.771					

MODEL
M1

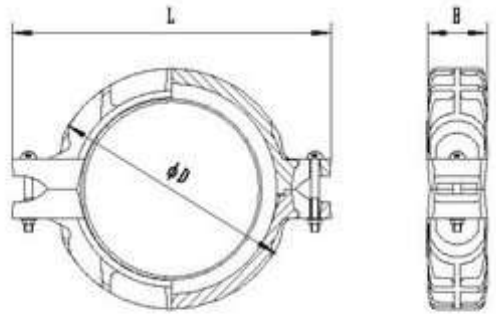

Rigid Coupling(Heavy-duty)

Nominal Size mm/in	Pipe O.D mm/in	Working pressure (PSI)	Dimensions ΦD mm	Dimensions L mm	Dimensions H mm	Bolt/Nut No.-size (mm)
65	76.1		101.2	144	46	
2½	3					"2-1/2x55
80	88.9		117.4	157	46	(M12x55)"
3	3.5					
100	108		144.4	195	50	
4	4.25					"2-1/2x75
100	114.3		149.2	200	50	(M12x75)"
4	4.5					
125	133		172	231	50	
5	5.25	500PSI				
125	139.7		180	235	50	
5	5.5					
125	141.3		180.4	235	50	
5	5.563					"2-5/8x85
150	159		203	268	50	(M16x85)"
6	6.25					
150	165.1		207	273	50	
6	6.5					
150	168.3		209.4	272	50	
6	6.625					
200	219.1		276	347	58	"2-3/4x110
8	8.625					(M20x110)"

MODEL
M2

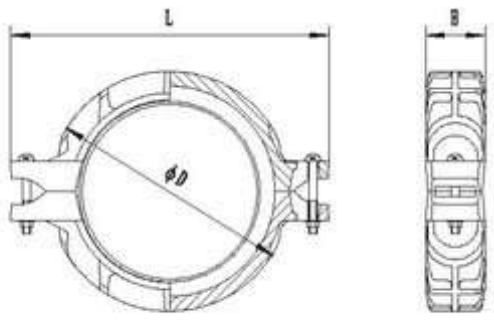

Flexible Coupling(Heavy-duty)

Nominal Size mm/in	Pipe O.D mm/in	Working pressure (PSI)	Dimensions ΦD mm	Dimensions L mm	Dimensions H mm	Bolt/Nut No.-size (mm)
65	76.1		101.2	144	46	
2½	3					"2-1/2x55
80	88.9		117.4	157	46	(M12x55)"
3	3.5					
100	108		144.4	195	50	
4	4.25					"2-1/2x75
100	114.3		149.2	200	50	(M12x75)"
4	4.5					
125	133		172	231	50	
5	5.25	500PSI				
125	139.7		180	235	50	
5	5.5					
125	141.3		180.4	235	50	"2-5/8x85
5	5.563					(M16x85)"
150	159		203	268	50	
6	6.25					
150	165.1		207	273	50	
6	6.5					
150	168.3		209.4	272	50	
6	6.625					
200	219.1		276	347	58	"2-3/4x110
8	8.625					(M20x110)"

MODEL
XGQT3

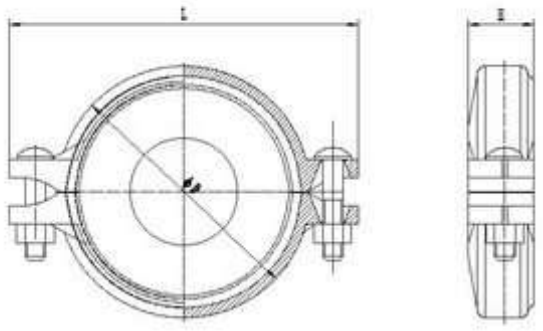

Reducing Flexible Coupling

Nominal Size mm/in	Pipe O.D mm/in	Working pressure (PSI)	Dimensions ΦD mm	Dimensions L mm	Dimensions H mm	Bolt/Nut No.-size (mm)
50x40	60.3x48.3	300PSI	82	130	46	
2x1 1/2	2.375x1.9					
65x32	73x42.4		97	151	46	
2 1/2x1 1/4	2.875x1.669					
65x40	73x48.3		97	151	46	"2-3/8x60
2 1/2x1 1/2	2.875x1.9					(M10x60)"
65x50	73x60.3		97	151	46	
2 1/2x2	2.875x2.375					
65x50	76.1x60.3		107	151	46	
2 1/2x2	3x2.375					
80x40	88.9x48.3		112	166.6	46	
3x1 1/2	3.5x1.9					
80x50	88.9x60.3		123.6	166.6	46	
3x2	3.5x2.375					"2-1/2x70
80x65	88.9x73.0		123.6	166.6	46	(M12x70)"
3x2 1/2	3.5x2.875					
80x65	88.9x76.1		123.6	166.6	46	
3x2 1/2	3.5x3					
100x50	114.3x60.3		151.2	200	50	
4x2	4.5x2.375					
100x65	114.3x73.0		151.2	200	50	
4x2 1/2	4.5x2.875					"2-1/2x75
100x65	114.3x76.1		151.2	200	50	(M12x75)"
4x2 1/2	4.5x3.0					
100x80	114.3x88.9		151.2	200	50	
4x3	4.5x3.5					
125x100	141.1x114.3		167	230	52	
5x4	5.563x4.5					
150x80	165.1x88.9		197	275	52	
6x3	6.5x3.5					
150x100	165.1x114.3		197	275	52	
6x4	6.5x4.5					
150x65	168.3x73		199.4	275	52	"2-5/8x85
6x2 1/2	6.625x2.875					(M16x85)"
150x80	168.3x88.9		199.4	275	52	
6x3	6.625x3.5					
150x100	168.3x114.3		199.4	275	52	
6x4	6.625x4.5					
150x125	168.3x141.3		199.4	275	52	
6x5	6.625x5.563					
200x150	219.1x168.3		258	336	58	"2-3/4x110
8x6	8.625x6.625					(M20x110)"

MODEL
XGQT01

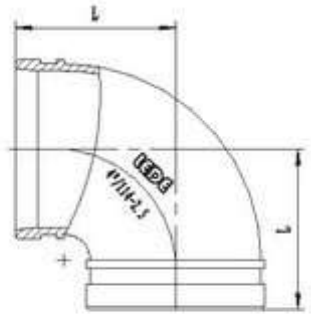

90°ELBOW

Nominal size mm/in	Pipe O.D mm/in	Working Pressure (PSI)	Dimensions mm L(mm) G	Dimensions mm L(mm) M
25	33.7			57
1	1.327			
32	42.4			70
$1^1/_4$	1.669			
40	48.3			70
$1^1/_2$	1.9			
50	60.3		70	83
2	2.375			
65	73		76	95
$2^1/_2$	2.875			
65	76.1		76	95
$2^1/_2$	3			
80	88.9		86	108
3	3.5			
100	108		102	127
54	4.25	300PSI		
100	114.3		102	127
4	4.5			
125	133		121	
5	5.25			
125	139.7		121	140
5	5.5			
125	141.3		121	140
5	5.563			
150	159		130	
6	6.25			
150	165.1		130	165
6	6.5			
150	168.3		140	165
6	6.625			
200	219.1		175	197
8	8.625			
250	273		220	
10	10.75			

MODEL
XGQT011

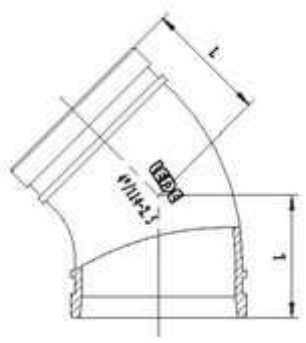

45°ELBOW

Nominal size mm/in	Pipe O.D mm/in	Working Pressure (PSI)	Dimensions mm L(mm) G	Dimensions mm L(mm) M
25	33.7			45
1	1.327			
32	42.4			45
11/4	1.669			
40	48.3			45
11/2	1.9			
50	60.3			51
2	2.375			
65	73			57
21/2	2.875			
65	76.1		48	57
21/2	3			
80	88.9		53	64
3	3.5			
100	108		60	76
4	4.25	300PSI		
100	114.3		60	76
4	4.5			
125	133		68	83
5	5.25			
125	139.7		68	83
5	5.5			
125	141.3		68	83
5	5.563			
150	159		75.5	89
6	6.25			
150	165.1		75.5	89
6	6.5			
150	168.3		75.5	89
6	6.625			
200	219.1		95	108
8	8.625			
250	273		112	
10	10.75			

MODEL
XGQT012

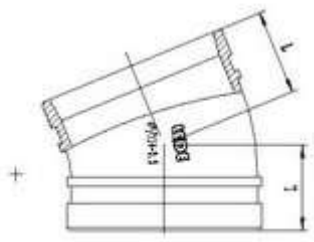

22.5°ELBOW

Nominal size mm/in	Pipe O.D mm/in	Working Pressure (PSI)	Dimensions(mm)
			L(mm)
50	60.3	300PSI	48
2	2.375		
80	88.9		57
3	3.5		
100	114.3		73
4	4.5		
125	139.7		73
5	5.5		
150	165.1		79
6	6.5		
200	219.1		98
8	8.625		

MODEL
XGQT013

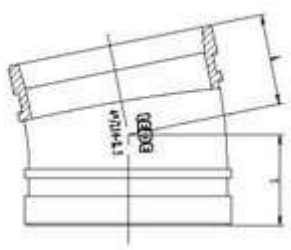

11.25°ELBOW

Nominal size mm/in	Pipe O.D mm/in	Working Pressure (PSI)	Dimensions(mm)
			L(mm)
50	60.3	300PSI	35
2	2.375		
80	88.9		38
3	3.5		
100	114.3		45
4	4.5		
125	139.7		51
5	5.5		
150	165.1		51
6	6.5		
200	219.1		51
8	8.625		

MODEL
XGQT014

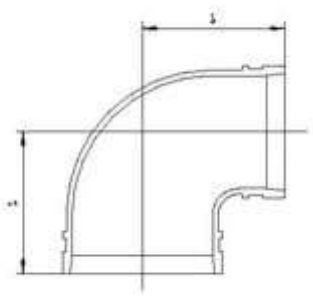

90°Reducing Elbow

Nominal size mm/in	Pipe O.D mm/in	Working Pressure (PSI)	Dimensions
			L(mm)/in
80x65	88.9x76.1	300PSI	"108
3x2$^1/_2$	3.5x3		4.25"
100x65	114.3x76.1		"127
4x2$^1/_2$	4.5x3		5.00"
100x80	114.3x88.9		"127
4x3	4.5x3.5		5.00"
150x100	165.1x114.3		"165
6x4	6.5x4.5		6.50"
150x100	168.3x114.3		"165
6x4	6.625x4.5		6.50"

MODEL
XGQT03

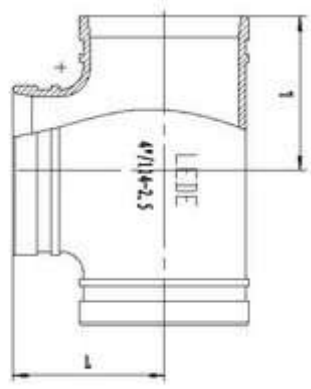

TEE

Nominal size mm/in	Pipe O.D mm/in	Working Pressure (PSI)	Dimensions (mm) L(mm)	
25	33.7	300PSI		57
1	1.327			
32	42.4			70
$1^1/_4$	1.669			
40	48.3			70
$1^1/_2$	1.9			
50	60.3		70	84
2	2.375			
65	73		76	101
$2^1/_2$	2.875			
65	76.1		76	101
$2^1/_2$	3			
80	88.9		85	108
3	3.5			
100	108		102	
4	4.25			
100	114.3		102	127
4	4.5			
125	133		121	
5	5.25			
125	139.7		121	140
5	5.5			
125	141.3		121	140
5	5.563			
150	159		130	
6	6.25			
150	165.1		130	165
6	6.5			
150	168.3		140	165
6	6.625			
200	219.1		175	197
8	8.625			
250	273		215	
10	10.75			
300	323.9		245	
12	12.75			

XGQT05

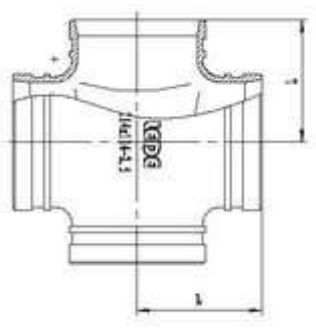

CROSS

Nominal size mm/in	Pipe O.D mm/in	Working Pressure (PSI)	Dimensions (mm) L(mm)
50	60.3	300PSI	70
2	2.375		
65	73		76
$2^1/_2$	2.875		
65	76.1		76
$2^1/_2$	3		
80	88.9		86
3	3.5		
100	108		102
4	4.25		
100	114.3		102
4	4.5		
125	133		121
5	5.25		
125	139.7		121
5	5.5		
150	159		130
6	6.25		
150	165.1		130
6	6.5		
150	168.3		140
6	6.625		
200	219.1		174
8	8.625		

MODEL
XGQT03

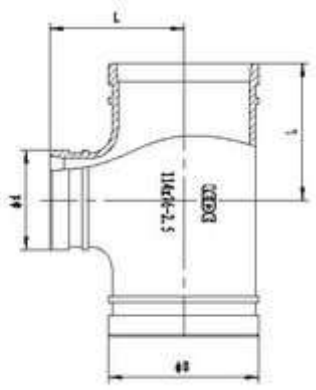

GROOVED REDUCING TEE

Nominal size mm/in	Pipe O.D mm/in	Working Pressure (PSI)	Dimensions L mm	Dimensions D mm	Dimensions d mm
50×40	60.3×48.3		70	60	48
2×1 1/2	2.375×1.9				
65×40	73×48.3		102	73	48
2 1/2×1 1/2	2.875×1.9				
65×50	73×60.3		76	73	60
2 1/2×2	2.875×2.375				
65×50	76.1×60.3		76	76	60
2 1/2×2	3×2.375				
80×40	88.9×48.3		86	89	48
3×1 1/2	3.5×1.9				
80×50	88.9×60.3		86	89	60
3×2	3.5×2.375				
80×65	88.9×73.0		86	89	73
3×2 1/2	3.5×2.875				
80×65	88.9×76.1		86	89	76
3×2 1/2	3.5×3				
100×65	108×76.1		102	108	76
4×2 1/2	4.25×3				
100×80	108×88.9		102	108	89
4×3	4.25×3.5				
100×65	114.3×73.0		102	114	73
4×2 1/2	4.5×2.875				
100×65	114.3×76.1		102	114	76
4×2 1/2	4.5×3				
100×80	114.3×88.9		102	114	89
4×3	4.5×3.5	300PSI			
125×50	139.7×60.3		121	140	60
5×2	5.5×2.375				
125×65	139.7×73.0		121	140	73
5×2 1/2	5.5×2.875				
125×65	139.7×76.1		121	140	76
5×2 1/2	5.5×3				
125×80	139.7×88.9		121	140	89
5×3	5.5×3.5				
125×100	139.7×108		121	140	108
5×4	5.5×4.25				
125×100	139.7×114.3		121	140	114
5×4	5.5×4.5				
150×65	159×76.1		130	159	76
6×2 1/2	6.25×3				
150×80	159×88.9		130	159	89
6×3	6.25×3.5				
150×125	159×133		130	159	133
6×5	6.25×5.25				
150×125	159×139.7		130	159	140
6×5	6.25×5.5				
150×50	165.1×60.3		130	165	60
6×2	6.5×2.375				
150×65	165.1×76.1		130	165	76
6×2 1/2	6.5×3				
150×80	165.1×88.9		130	165	89
6×3	6.5×3.5				
150×100	165.1×114.3		130	165	114
6×4	6.5×4.5				

Nominal size mm/in	Pipe O.D mm/in	Working Pressure (PSI)	Dimensions L mm	Dimensions D mm	Dimensions d mm
150×125	165.1×139.7		130	165	140
6×5	6.5×5.5				
150×125	165.1×141.3		130	165	141
6×5	6.5×5.563				
150×65	168.3×76.1		140	168	76
6×2 1/2	6.625×3				
150×80	168.3×88.9		140	168	89
6×3	6.625×3.5				
150×125	168.3×139.7		140	168	140
6×5	6.625×5.5				
150×125	168.3×141.3		140	168	141
6×5	6.625×5.563				
200×65	219.1×76.1		174	219	76
8×2 1/2	8.625×3				
200×80	219.1×88.9		174	219	89
8×3	8.625×3.5				
200×100	219.1×108		174	219	108
8×4	8.625×4.25				
200×100	219.1×114.3		174	219	114
8×4	8.625×4.5				
200×125	219.1×133		174	219	133
8×5	8.625×5.25				
200×125	219.1×139.7		174	219	140
8×5	8.625×5.5				
200×150	219.1×159		174	219	159
8×6	8.625×6.25	300PSI			
200×150	219.1×165.1		174	219	165
8×6	8.625×6.5				
250×100	273×108		215	273	108
10×4	10.75×4.25				
250×100	273×114.3		215	273	114
10×4	10.75×4.5				
250×125	273×133		215	273	133
10×5	10.75×5.25				
250×125	273×139.7		215	273	140
10×5	10.75×5.5				
250×150	273×159		215	273	159
10×6	10.75×6.25				
250×150	273×165.1		215	273	165
10×6	10.75×6.5				
250×200	273×219.1		215	273	219
10×8	10.75×8.625				
300×150	323.9×159		245	325	159
12×6	12.75×6.25				
300×150	323.9×165.1		245	325	165
12×6	12.75×6.5				
300×200	323.9×219.1		245	325	219
12×8	12.75×8.625				
300×250	323.9×273		245	325	273
12×10	12.75×10.75				
350×200	377.0×219.1		305	377	219
14×8	14.843×8.625				

MODEL
XGQT03

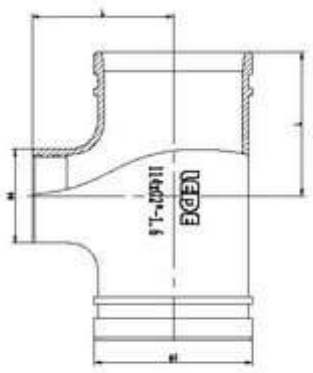

THREADED REDUCING TEE

Nominal size mm/in	Pipe O.D mm/in	Working Pressure (PSI)	Dimensions L(L1)① mm		D mm	d mm
50×25	60.3xRc1			70	60	40
2×1	2.375×1.327					
50×32	60.3xRc1 1/4			70	60	52
2×1 1/4	2.375×1.669					
50×40	60.3xRc1 1/2			70	60	58
2×1 1/2	2.375x1.9					
65×25	73.0xRc1			76	73	40
2 1/2×1	2.875x1.327					
65×32	73.0xRc1 1/4			76	73	52
2 1/2×1 1/4	2.875x1.669					
65×40	73xRc1 1/2			76	73	58
2 1/2×1 1/2	2.875x1.9					
65×25	76.1xRc1			76	76	40
2 1/2×1	3x1.327					
65×32	76.1xRc1 1/4			76	76	52
2 1/2×1 1/4	3x1.669					
65×40	76.1xRc1 1/2			76	76	58
2 1/2×1 1/2	3x1.9					
65×50	76.1xRc2			76	76	70
2 1/2×2	3x2.375					
80×25	88.9xRc1			86	89	40
3×1	3.5x1.327					
80×32	88.9xRc1 1/4			86	89	52
3×1 1/4	3.5x1.669					
80×40	88.9xRc1 1/2			86	89	56
3×1 1/2	3.5x1.9					
80×50	88.9xRc2			86	89	70
3×2	3.5x2.375					
80×65	88.9xRc2 1/2			86	89	86
3×2 1/2	3.5x3					
100×50	108.0xRc2			102	108	70
4×2	4.25x2.375					
100×65	108.0xRc2 1/2			102	108	86
4×2 1/2	4.25x3					
100×80	108xRc3			102	108	99
4×3	4.25x3.5					
100×25	114.3xRc1		90 / 98*		114	40
4×1	4.5x1.327					
100×32	114.3xRc1 1/4		90 / 98*		114	52
4×1 1/4	4.5x1.669	300PSI				
100×40	114.3xRc1 1/2		90 / 98*		114	58
4×1 1/2	4.5x1.9					
100×50	114.3xRc2		90 / 98*		114	70
4×2	4.5x2.375					
100×65	114.3xRc2 1/2		90 / 98*		114	86
4×2 1/2	4.5x3					
100×80	114.3xRc3		90 / 98*		114	89
4×3	4.5x3.5					
125×50	139.7xRc2		105		140	70
5×2	5.5x2.375					
125×65	139.7xRc2 1/2		105		140	86
5×2 1/2	5.5x3					
125×80	139.7xRc3		105		140	99
5×3	5.5x3.5					
125×100	139.7xRc4			121	140	124
5×4	5.5x4.5					
150×50	159.0xRc2			130	159	70
6×2	6.25x2.375					
150×65	159.0xRc2 1/2			130	159	86
6×2 1/2	6.25x3					
150×25	165.1xRc1			130	165	40
6×1	6.5x1.327					
150×32	165.1xRc1 1/4			130	165	52
6×1 1/4	6.5x1.669					
150×40	165.1xRc1 1/2		110 / 120*		165	58
6×1 1/2	6.5x1.9					
150×50	165.1xRc2		110 / 120*		165	70
6×2	6.5x2.375					
150×65	165.1xRc2 1/2		110 / 120*		165	86
6×2 1/2	6.5x3					
150×80	165.1xRc3		110 / 120*		165	99
6×3	6.5x3.5					
150×100	165.1xRc4		110 / 120*		165	124
6×4	6.5x4.5					
200×50	219.1xRc2			174	219	70
8×2	8.625x2.375					
200×50	219.1xRc2 1/2			174	219	86
8×2 1/2	8.625x3					
200×80	219.1xRc3			174	219	99
8×3	8.625x3.5					
200×100	219.1xRc4			174	219	124
8×4	8.625x4.5					

①Note: * means L1 size

MODEL
XGQT05

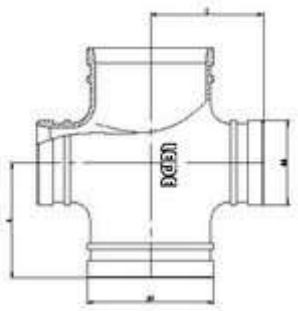

GROOVED REDUCING CROSS

Nominal size mm/in	Pipe O.D mm/in	Working Pressure (PSI)	Dimensions		
			L	D	d
			mm	mm	mm
65×50	76.1×60.3		76	76	60
2 1/2×2	3×2.375				
80×50	88.9×60.3		86	89	60
3×2	3.5×2.375				
80×65	88.9×76.1		86	89	76
3×2 1/2	3.5×3				
100×50	108×60.3		102	108	60
4×2	4.25×2.375				
100×65	108×76.1		102	108	76
4×2 1/2	4.25×3				
100×50	114.3×60.3		102	114	60
4×2	4.5×2.375				
100×65	114.3×76.1		102	114	76
4×2 1/2	4.5×3				
100×80	114.3×88.9		102	114	89
4×3	4.5×3.5				
125×65	133×76.1		121	133	76
5×2 1/2	5.25×3				
125×80	133×88.9		121	133	89
5×3	5.25×3.5				
125×100	133×108		121	133	108
5×4	5.25×4.25				
125×100	133×114.3		121	133	114
5×4	5.25×4.5				
125×65	139.7×76.1		121	140	76
5×2 1/2	5.5×3				
125×80	139.7×88.9		121	140	89
5×3	5.5×3.5				
125×100	139.7×108		121	140	108
5×4	5.5×4.25				
125×100	139.7×114.3		121	140	114
5×4	5.5×4.5				
150×65	159×76.1		130	159	76
6×2 1/2	6.25×3				
150×80	159×88.9		130	159	89
6×3	6.25×3.5				
150×100	159×108	300PSI	130	159	108
6×4	6.25×4.25				
150×100	159×114.3		130	159	114
6×4	6.25×4.5				
150×125	159×133		130	159	133
6×5	6.25×5.25				
150×125	159×139.7		130	159	140
6×5	6.25×5.5				
150×50	165.1×60.3		130	165	60
6×2	6.5×2.375				
150×65	165.1×76.1		130	165	76
6×2 1/2	6.5×3				
150×80	165.1×88.9		130	165	89
6×3	6.5×3.5				
150×100	165.1×108		130	165	108
6×4	6.5×4.25				
150×100	165.1×114.3		130	165	114
6×4	6.5×4.5				
150×125	165.1×133		130	165	133
6×5	6.5×5.25				
150×125	165.1×139.7		130	165	140
6×5	6.5×5.5				
200×65	219.1×76.1		174	219	76
8×2 1/2	8.625×3				
200×80	219.1×88.9		174	219	89
8×3	8.625×3.5				
200×100	219.1×108		174	219	108
8×4	8.625×4.25				
200×100	219.1×114.3		174	219	114
8×4	8.625×4.5				
200×125	219.1×133		174	219	133
8×5	8.625×5.25				
200×125	219.1×139.7		174	219	140
8×5	8.625×5.5				
200×150	219.1×159		174	219	159
8×6	8.625×6.25				
200×150	219.1×165.1		174	219	165
8×6	8.625×6.5				

MODEL
XGQT04

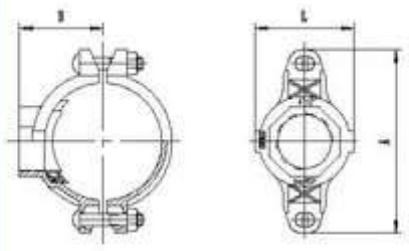

Threaded Mechanical Tee

Nominal Size mm/in	Pipe O.D mm/in	Working pressure (PSI)	Dimensions A mm	Dimensions L mm	Dimensions H mm	Bolt/Nut No.-size(mm)	Hole Dimension (mm)
50x15	60.3xRc1/2		110	54	50		Φ30
2x1/2	2.375x0.825						
50x20	60.3xRc3/4		112	54	50		Φ30
2x3/4	2.375x1.05						
50x25	60.3xRc1		120	72	50	"2-3/8x50 (2-M10x50)"	Φ38
2x1	2.375x1.327						
50x32	60.3xRc1 1/4		120	83	55		Φ46
2x1 1/4	2.375x1.669						
50x40	60.3xRc1 1/2		120	83	63		Φ46
2x1 1/2	2.375x1.9						
65x25	73.0xRc1		139	76	60		Φ38
2 1/2x1	2.875x1.327						
65x32	73.0xRc1 1/4		139	83	60		Φ46
2 1/2x1 1/4	2.875x1.669						
65x40	73.0xRc1 1/2		139	90	60		Φ53
2 1/2x1 1/2	2.875x1.9						
65x15	76.1xRc1/2		139	54	58		Φ30
2 1/2x1/2	3x0.825						
65x20	76.1xRc3/4		139	54	58		Φ30
2 1/2x3/4	3x1.05						
65x25	76.1xRc1		139	76	60		Φ38
2 1/2x1	3x1.327						
65x32	76.1xRc1 1/4		139	83	60		Φ46
2 1/2x1 1/4	3x1.669					"2-3/8x60 (2-M10x60)"	
65x40	76.1xRc1 1/2		139	90	60		Φ53
2 1/2x1 1/2	3x1.9						
80x15	88.9xRc1/2		155	59	66.5		Φ30
3x1/2	3.5x0.825						
80x20	88.9xRc3/4		155	59	66.5		Φ30
3x3/4	3.5x1.05						
80x25	88.9xRc1		155	76	66.5		Φ38
3x1	3.5x1.327						
80x32	88.9xRc1 1/4		155	83	66.5		Φ46
3x1 1/4	3.5x1.669						
80x40	88.9xRc1 1/2		155	90	66.5		Φ53
3x1 1/2	3.5x1.9						
80x50	88.9xRc2		155	100	66.5		Φ64
3x2	3.5x2.375	300PSI					
100x25	108.0xRc1		167	76	76		Φ38
4x1	4.250x1.327						
100x32	108.0xRc1 1/4		167	83	76		Φ46
4x1 1/4	4.25x1.669						
100x40	108.0xRc1 1/2		167	90	76		Φ53
4x1 1/2	4.25x1.9						
100x50	108.0xRc2		167	100	78		Φ64
4x2	4.25x2.375						
100x65	108.0xRc2 1/2		167	117	83		Φ80
4x2 1/2	4.25x3						
100x25	114.3xRc1		181	76	83	"2-1/2x70 (2-M12x70)"	Φ38
4x1	4.5x1.327						
100x32	114.3xRc1 1/4		181	83	83		Φ46
4x1 1/4	4.5x1.669						
100x40	114.3xRc1 1/2		181	90	83		Φ53
4x1 1/2	4.5x1.9						
100x50	114.3xRc2		181	100	83		Φ64
4x2	4.5x2.375						
100x65	114.3xRc2 1/2		181	117	83		Φ80
4x2 1/2	4.5x3						
100x80	114.3xRc3		181	129	83		Φ92
4x3	4.5x3.5						
125x25	133.0xRc1		205	76	89		Φ38
5x1	5.250x1.327						
125x32	133.0xRc1 1/4		205	83	89		Φ46
5x1 1/4	5.25x1.669						
125x40	133.0xRc1 1/2		205	90	89		Φ53
5x1 1/2	5.25x1.9						
125x50	133.0xRc2		205	100	89	"2-1/2x75 (2-M12x75)"	Φ64
5x2	5.25x2.375						
125x65	133.0xRc2 1/2		205	117	92		Φ80
5x2 1/2	5.25x3						
125x25	139.7xRc1		212	76	93		Φ38
5x1	5.5x1.327						
125x32	139.7xRc1 1/4		212	83	93		Φ46
5x1 1/4	5.5x1.669						
125x40	139.7xRc1 1/2		212	90	93		Φ53
5x1 1/2	5.5x1.9						

Nominal Size mm/in	Pipe O.D mm/in	Working pressure (PSI)	Dimensions A mm	Dimensions L mm	Dimensions H mm	Bolt/Nut No.-size(mm)	Hole Dimension (mm)
125x50	139.7xRc2		212	100	93		Φ64
5x2	5.5x2.375						
125x65	139.7xRc2 1/2		212	117	93		Φ80
5x2 1/2	5.5x3						
125x80	139.7xRc3		212	129	95		Φ92
5x3	5.5x3.5						
125x25	141.3xRc1		212	76	93		Φ38
5x1	5.563x1.327						
125x32	141.3xRc1 1/4		212	83	93	"2-1/2x75 (2-M12x75)"	Φ46
5x1 1/4	5.563x1.669						
125x40	141.3xRc1 1/2		212	90	93		Φ53
5x1 1/2	5.563x1.9						
125x50	141.3xRc2		212	100	93		Φ64
5x2	5.563x2.375						
125x65	141.3xRc2 1/2		212	117	93		Φ80
5x2 1/2	5.563x3						
125x80	141.3xRc3		212	129	95		Φ92
5x3	5.563x3.5						
150x25	159xRc1		233	76	101.5		Φ38
6x1	6.250x1.327						
150x32	159.0xRc1 1/4		233	83	101.5		Φ46
6x1 1/4	6.250x1.669						
150x40	159.0xRc1 1/2		233	90	101.5		Φ53
6x1 1/2	6.250x1.9						
150x50	159.0xRc2		233	100	101.5		Φ64
6x2	6.250x2.375						
150x65	159.0xRc2 1/2		233	117	105.5		Φ80
6x2 1/2	6.250x3						
150x80	159.0xRc3		233	129	105.5	"2-9/16x75 (2-M14x75)"	Φ92
6x3	6.250x3.5						
150x100	159.0xRc4		233	157	110		Φ118
6x4	6.250x4.5						
150x32	165.1xRc1 1/4		239	83	106		Φ46
6x1 1/4	6.5x1.669						
150x40	165.1xRc1 1/2		239	90	106		Φ53
6x1 1/2	6.5x1.9						
150x50	165.1xRc2		239	100	106		Φ64
6x2	6.5x2.375	300PSI					
150x65	165.1xRc2 1/2		239	117	106		Φ80
6x2 1/2	6.5x3						
150x80	165.1xRc3		239	129	108		Φ92
6x3	6.5x3.5						
150x100	165.1xRc4		239	157	110		Φ118
6x4	6.5x4.5						
150x25	168.3xRc1		239	76	106		Φ38
6x1	6.625x1.327						
150x32	168.3xRc1 1/4		239	83	106		Φ46
6x1 1/4	6.625x1.669						
150x40	168.3xRc1 1/2		239	90	106		Φ53
6x1 1/2	6.625x1.9						
150x50	168.3xRc2		239	100	106	"2-9/16x85 (2-M14x85)"	Φ64
6x2	6.625x2.375						
150x65	168.3xRc2 1/2		239	117	106		Φ80
6x2 1/2	6.625x3						
150x80	168.3xRc3		239	129	108		Φ92
6x3	6.625x3.5						
150x100	168.3xRc4		239	157	110		Φ118
6x4	6.625x4.5						
200x25	219.1xRc1		311	76	131		Φ38
8x1	8.625x1.327						
200x32	219.1xRc1 1/4		311	83	134		Φ46
8x1 1/4	8.625x1.669						
200x40	219.1xRc1 1/2		311	90	134		Φ53
8x1 1/2	8.625x1.9						
200x50	219.1xRc2		311	100	134	"2-5/8x85 (2-M16x85)"	Φ64
8x2	8.625x2.375						
200x65	219.1xRc2 1/2		311	117	134		Φ80
8x2 1/2	8.625x3						
200x80	219.1xRc3		311	129	134		Φ92
8x3	8.625x3.5						
200x100	219.1xRc4		311	157	134		Φ118
8x4	8.625x4.5						
250x65	273.0xRc2 1/2		379	117	159		Φ80
10xRc2 1/2	10.75x3					2-3/4x90 (2-M20x90)	
250x80	273.0xRc3		379	129	162		Φ92
10x3	10.75x3.5						

MODEL
XGQT04

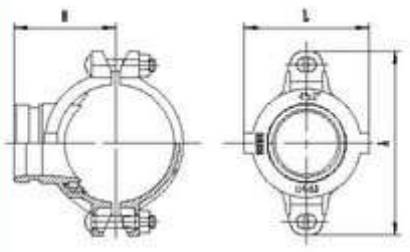

Grooved Mechanical Tee

Nominal Size mm/in	Pipe O.D mm/in	Working pressure (PSI)	Dimensions A mm	Dimensions L mm	Dimensions H mm	Bolt/Nut No.-size(mm)	Hole Dimension (mm)
50x32	60.3x42.4		120	83	70		Φ46
2x1 1/4	2.375x1.669					"2-3/8x50	
50x40	60.3x48.3		120	83	70	(2-M10x50)"	Φ46
2x1 1/2	2.375x1.9						
65x32	76.1x42.4		139	83	73		Φ46
2 1/2x1 1/4	3x1.669						
65x40	76.1x48.3		139	90	75		Φ53
2 1/2x1 1/2	3x1.9						
80x32	88.9x42.4		155	83	82	"2-3/8x60	Φ46
3x1 1/4	3.5x1.669					(2-M10x60)"	
80x40	88.9x48.3		155	90	82		Φ53
3x1 1/2	3.5x1.9						
80x50	88.9x60.3		155	100	82		Φ66
3x2	3.5x2.375						
100x25	114.3x33.7		181	72	95.5		Φ38
4x1	4.5x1.327						
100x32	114.3x42.4		181	83	95.5		Φ46
4x1 1/4	4.5x1.669						
100x40	114.3x48.3		181	90	95.5		Φ53
4x1 1/2	4.5x1.9						
100x50	114.3x60.3		181	100	95.5	"2-1/2x70	Φ66
4x2	4.5x2.375					(2-M12x70)"	
100x65	114.3x73	300PSI	181	117	95.5		Φ80
4x2 1/2	4.5x2.875						
100x65	114.3x76.1		181	117	95.5		Φ80
4x2 1/2	4.5x3						
100x80	114.3x88.9		181	129	95.5		Φ92
4x3	4.5x3.5						
125x40	139.7x48.3		212	90	109		Φ53
5x1 1/2	5.5x1.9						
125x50	139.7x60.3		212	100	109		Φ64
5x2	5.5x2.375						
125x65	139.7x76.1		212	117	109		Φ80
5x2 1/2	5.5x3						
125x80	139.7x88.9		212	129	109		Φ92
5x3	5.5x3.5						
125x100	139.7x114.3		219	154	113	"2-1/2x75	Φ111
5x4	5.5x4.5					(2-M12x75)"	
125x40	141.3x48.3		212	90	109		Φ53
5x1 1/2	5.563x1.9						
125x50	141.3x60.3		212	100	109		Φ64
5x2	5.563x2.375						
125x65	141.3x76.1		212	117	109		Φ80
5x2 1/2	5.563x3						
125x80	141.3x88.9		212	129	109		Φ92
5x3	5.563x3.5						

Nominal Size mm/in	Pipe O.D mm/in	Working pressure (PSI)	Dimensions A mm	Dimensions L mm	Dimensions H mm	Bolt/Nut No.-size (mm)	Hole Dimension (mm)
125x100	141.3x114.3		219	154	113		Φ111
5x4	5.563x4.5						
150x50	159x60.3		233	100	118		Φ64
6x2	6.25x2.375						
150x65	159x76.1		233	117	118		Φ80
6x2 1/2	6.25x3						
150x80	159x88.9		233	129	118		Φ92
6x3	6.25x3.5						
150x100	159.0x108.0		233	143	119.5		Φ104
6x4	6.25x4.25						
150x100	159.0x114.3		233	153	119.5		Φ111
6x4	6.25x4.5					"2-9/16x75	
150x50	165.1x60.3		239	100	121	(2-M14x75)"	Φ64
6x2	6.5x2.375						
150x65	165.1x73.0		239	117	121		Φ80
6x2 1/2	6.5x2.875						
150x65	165.1x76.1		239	117	121		Φ80
6x2 1/2	6.5x3						
150x80	165.1x88.9		239	129	121		Φ92
6x3	6.5x3.5						
150x100	165.1x108		239	143	122		Φ104
6x4	6.5x4.25						
150x100	165.1x114.3	300PSI	239	153	122.5		Φ111
6x4	6.5x4.5						
150x50	168.3x60.3		239	100	121		Φ64
6x2	6.625x2.375						
150x65	168.3x76.1		239	117	121		Φ80
6x2 1/2	6.625x3					"2-9/16x85	
150x80	168.3x88.9		239	129	121	(2-M14x85)"	Φ92
6x3	6.625x3.5						
150x100	168.3x114.3		239	153	122.5		Φ111
6x4	6.625x4.5						
200x50	219.1x60.3		311	100	147.5		Φ64
8x2	8.625x2.375						
200x65	219.1x76.1		311	117	147.5		Φ80
8x2 1/2	8.625x3						
200x80	219.1x88.9		311	129	147.5	"2-5/8x85	Φ92
8x3	8.625x3.5					(2-M16x85)"	
200x100	219.1x108		311	143	148.5		Φ104
8x4	8.625x4.25						
200x100	219.1x114.3		311	153	149		Φ111
8x4	8.625x4.5						
250x100	273x114.3		379	147	177		Φ104
10x4	10.75x4.5					"2-3/4x90	
250x150	273x165.1		379	197.6	178	(2-M20x90)"	Φ155
10x6	10.75x6.5						

MODEL
XGQT041

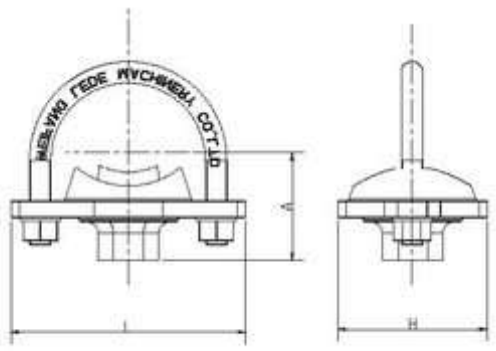

U-Bolt Mechanical Tee

Nominal Size mm/in	Pipe O.D mm/in	HOLE DIA mm/in	Working pressure (PSI)	Dimensions A mm	Dimensions L mm	Dimensions H mm	"U Bolt size (mm)"
25x15	33.7xRc$^1/_2$	30.00		53	89	56	5/16x44
1x$^1/_2$	1.327x0.825	1.18					(M8x44)
32x15	42.4xRc$^1/_2$	30.00		53	89	56	
1$^1/_4$x$^1/_2$	1.669x0.825	1.18					
32x20	42.4xRc$^3/_4$	30.00		53	89	56	
1$_1/_4$x$^3/_4$	1.669x1.05	1.18					
32x25	42.4xRc1	30.00		56	89	56	
1$^1/_4$x1	1.669x1.327	1.18					"3/8x78
40x15	48.3xRc$^1/_2$	30.00		55	89	56	(M10x78)"
1$^1/_2$x$^1/_2$	1.9x0.825	1.18					
40x20	48.3xRc$^3/_4$	30.00		55	89	56	
1$^1/_2$x$^3/_4$	1.9x1.05	1.18					
40x25	48.3xRc1	30.00		58	89	56	
1$^1/_2$x1	1.9x1.327	1.18					
50x15	60.3xRc$^1/_2$	30.00	300PSI	64	98	56	
2x$^1/_2$	2.375x0.825	1.18					
50x20	60.3xRc$^3/_4$	30.00		64	98	56	"3/8x92
2x$^3/_4$	2.375x1.05	1.18					(M10x92)"
50x25	60.3xRc1	30.00		67	98	56	
2x1	2.375x1.327	1.18					
65x15	73.0xRc$^1/_2$	30.00		69	111	56	
2$^1/_2$x$^1/_2$	3x0.825	1.18					
65x20	73.0xRc$^3/_4$	30.00		69	111	56	
2$^1/_2$x$^3/_4$	3x1.05	1.18					
65x25	73.0xRc1	30.00		72	111	56	
2$^1/_2$x1	3x1.327	1.18					"3/8x108
65x15	76.1xRc$^1/_2$	30.00		69	111	56	(M10x108)"
2$^1/_2$x$^1/_2$	3x0.825	1.18					
65x20	76.1xRc$^3/_4$	30.00		69	111	56	
2$^1/_2$x$^3/_4$	3x1.05	1.18					
65x25	76.1xRc1	30.00		72	111	56	
2$^1/_2$x1	3x1.327	1.18					
80x25	88.9xRc1	30.00		72	111	56	3/8x135
3x1	3.5x1.327	1.18					(M10x135)

MODEL
XGQT071

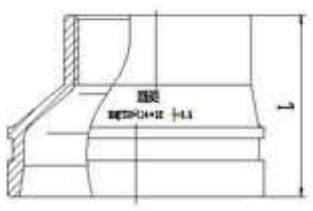

THREADED ECCENTRIC REDUCER

Nominal size mm/in	Pipe O.D mm/in	Working Pressure (PSI)	Dimensions L (mm)
100x65	114.3xRc2 1/2	300PSI	80
4x2 1/2	4.5x3		
150x65	165.1xRc2 1/2		102
6x2 1/2	6.5x3		

MODEL
XGQT072

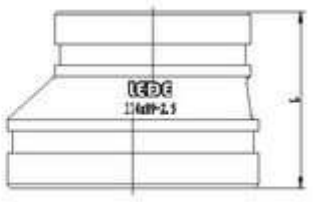

GROOVED ECCDENTRIC REDUCER

Nominal size mm/in	Pipe O.D mm/in	"Working Pressure(PSI) "	Dimensions L(mm)
100x80	114.3x88.9	300PSI	80
4x3	4.5x3.5		
125x100	139.7x114.3		102
5x4	5.5x4.5		
150x100	165.1x114.3		102
6x4	6.5x4.5		
150x125	165.1x139.7		102
6x5	6.5x5.5		
200x100	219.1x114.3		127
8x4	8.625x4.5		
200x150	219.1x165.1		127
8x6	8.625x6.5		

MODEL
XGQT03

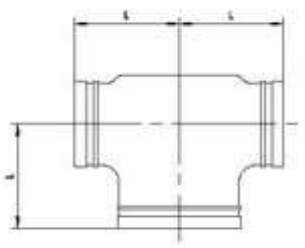

Bullhead TEE

Nominal size mm/in	Pipe O.D mm/in	Working Pressure (PSI)	Dimensions		
			L	D	d
			mm	mm	mm
100x150	114.3x165.1	300PSI	140	114	165
4x6	4.5x6.5				
80x100	88.9x114.3		L115xL125	89	114
3x4	3.5x4.5				

MODEL
XGQT06

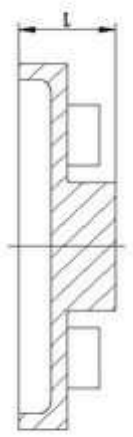

Cap

Nominal Size mm/in	Pipe O.D mm/in	Working pressure (PSI)	Dimensions L (mm)
25	33.7		24
1	1.327		
32	42.4		24
1 1/4	1.669		
40	48.3		24
1 1/2	1.9		
50	60.3		27
2	2.375		
65	73		27
2 1/2	2.875		
65	76.1		27
2 1/2	3		
80	88.9		27
3	3.5		
100	108		27
4	4.25		
100	114.3	300PSI	27
4	4.5		
125	133		27
5	5.25		
125	"139.7(141.3)"		27
5	"5.5(5.563)"		
150	159		27
5	6.25		
150	165.1		27
6	6.5		
150	168.3		27
6	6.625		
200	219.1		32
8	8.625		
250	273		32
10	10.75		
300	323.9		32
12	12.75		

MODEL
XGQT061

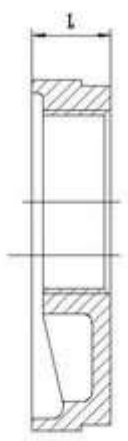

Cap with Eccentric hole

Nominal Size mm/in	Pipe O.D mm/in	Working pressure (PSI)	Dimensions L (mm)
50×25	60.3×Rc1		23.8
2×1	2.375×1.327		
50×32	60.3×Rc1 1/4		23.8
2×1 1/4	2.375×1.669		
50×40	60.3×Rc1 1/2		23.8
2×1 1/2	2.375×1.901		
65×25	76.1×Rc1		23.8
2 1/2×1	3×1.327		
65×32	76.1×Rc1 1/4		23.8
2 1/2×1 1/4	3×1.669		
65×40	76.1×Rc1 1/2		23.8
2 1/2×1 1/2	3×1.901		
65×50	76.1×Rc2		23.8
2 1/2×2	3×2.375		
80×32	88.9×Rc1 1/4	300PSI	23.8
3×1 1/4	3×1.669		
89×40	88.9×Rc1 1/2		23.8
3×1 1/2	3×1.901		
80×50	88.9×Rc2		23.8
3×2	3.5×2.375		
100×40	114.3×Rc1 1/2		25.4
4×1 1/2	4.5×1.901		
100×50	114.3×Rc2		25.4
4×2	4.5×2.375		
125×50	"139.7×Rc2(141.3×Rc2)"		25.4
5×2	"5.5×2.375(5.563×2.375)"		
150×40	168.3×Rc1 1/2		25.4
6×1 1/2	6.63×1.901		
150×50	168.3×Rc2		25.4
6×2	6.63×2.375		
200×50	219.1×Rc2		28
8×2	8.625×2.375		

Castings

Chemical composition are strictly controlled for every batch of castings, bottom inspection will be conducted for every furnace with tensile bars to trace back, to assure the castings to meet the requirements of ASTM 536 and ISO1083.

Bolts and Nuts

Made of excellent carbon steel, heat treated, zinc electroplated, conform to ASTM A183/ISO 898.

Gaskets

Material	Applied Temperture	Color	Applied field
EPDM	-34°C –+110°C	Black	Water,non-oil gas,diluted acid, alkaline salt, and multi-chemicals free of hydrocarbon. Oil-like me-diums are forbidden
Silica gel	-40°C –+117°C	White	Drinking water, hot water, high-termperture air and some high-temperture chemicals. Oil like me-diums are forbidden

Surface

All the castings are treated with sand blasting before finishing, for different environment, different finishes are recommended, like epoxy powder, paint, dacromat to meet different requirements of the clients.

LEDE®

***We** are dedicated*

to improving our products on Every Detail

LEDE®

SHANDONG LEDE MACHINERY CO.,LTD
Add:No.3998,Northern part of west outer ring,
Weifang City,Shandong.R.R.China
E-mail:wflede@vip.163.com
Tel/Fax:+86-536-8167992
Http://www.ledegroup.cn